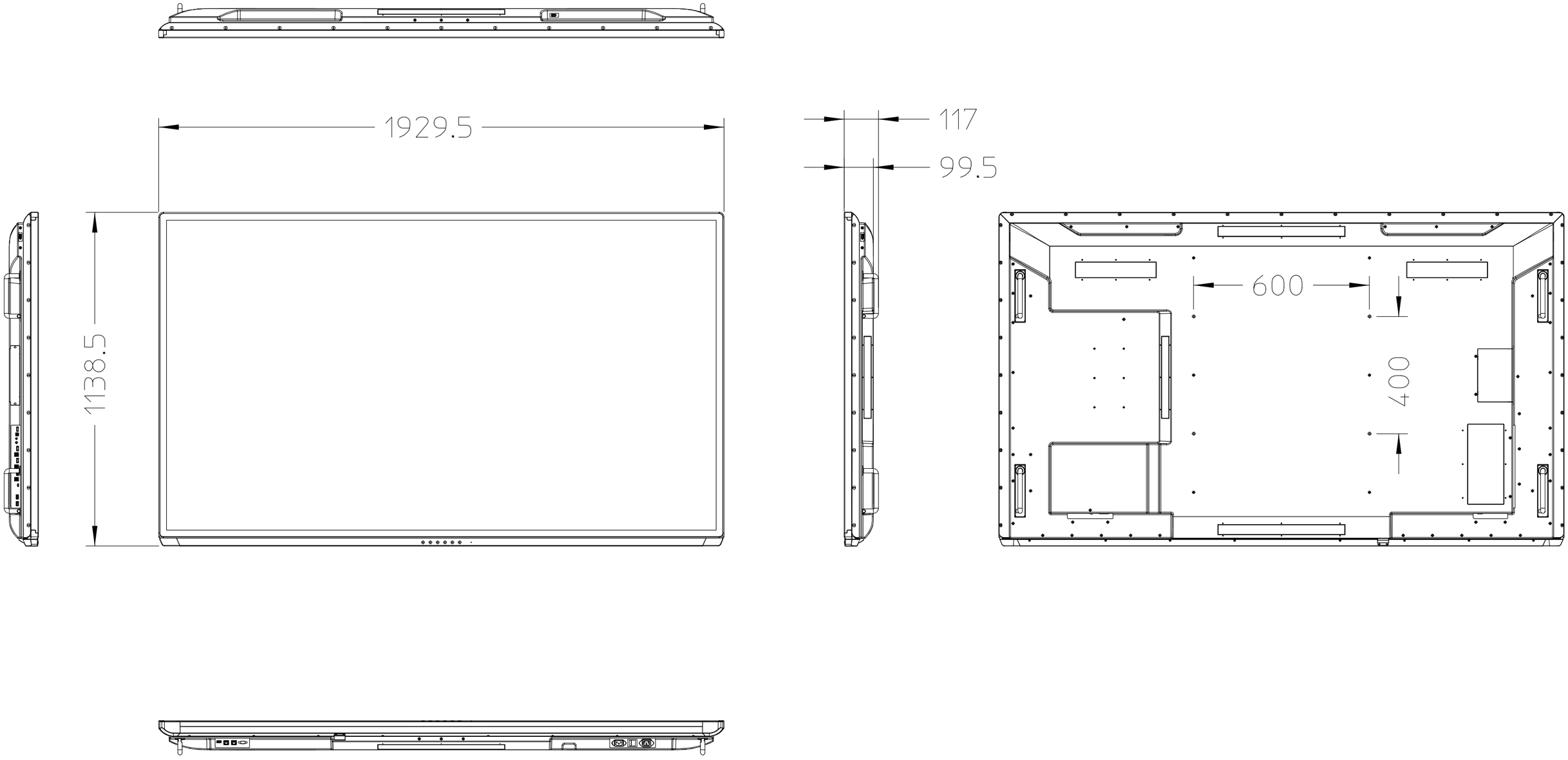
1929.5
1138.5
117
99.5
600
400