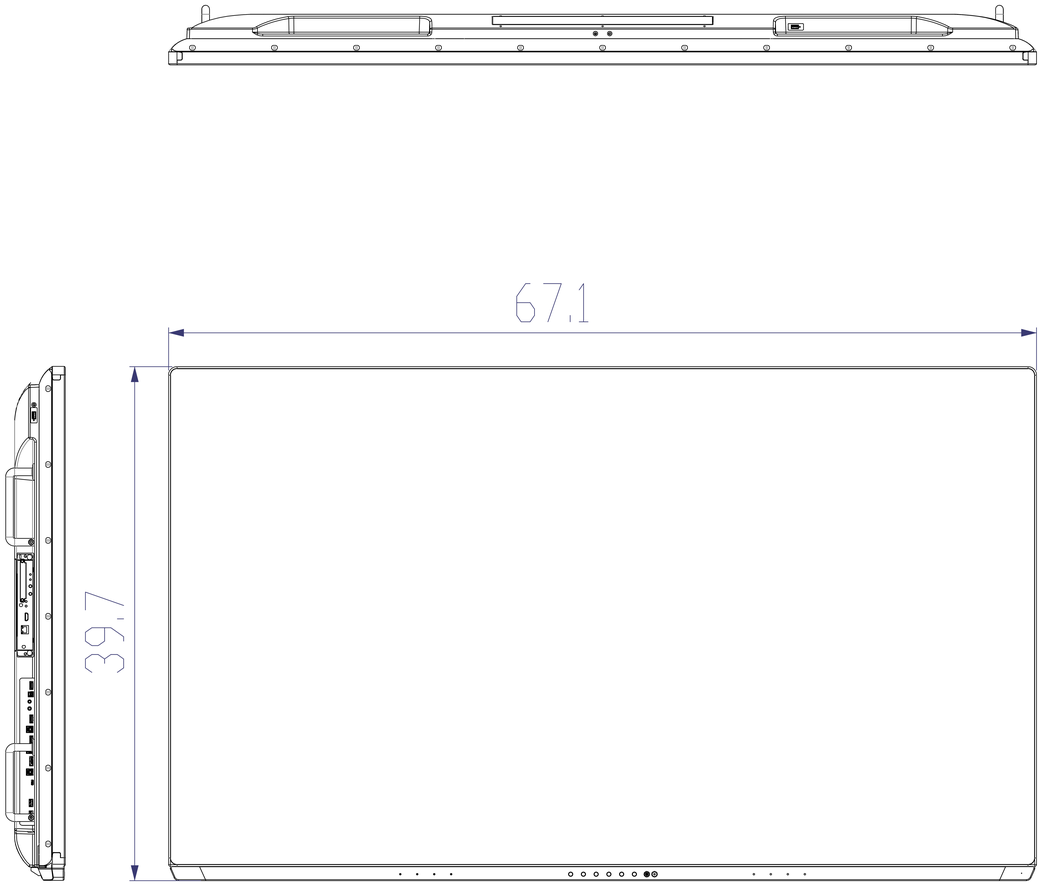
67.1
39.7

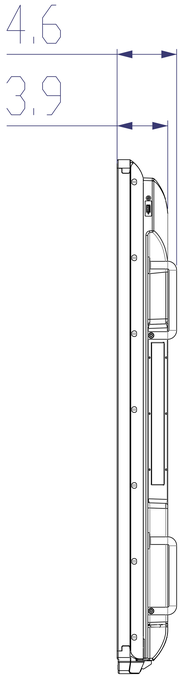
4.6
3.9

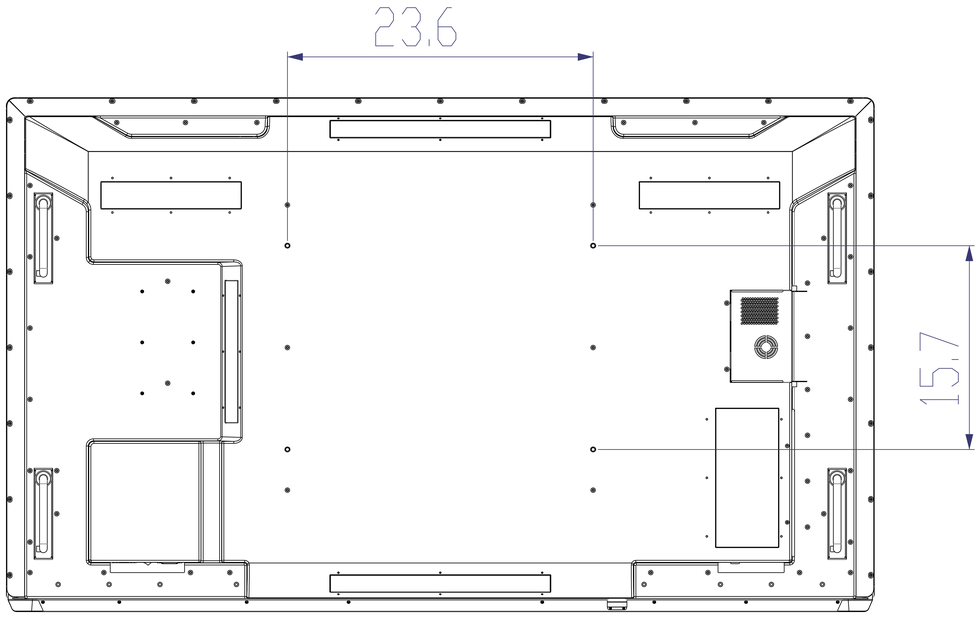
23.6
15.7